C2R2MAX

SETUP Sheet

Event		Car N°(chassis)	R2 Max	**TARMAC SET-UP "HIGH GRIP"**
Date		Surface	Tarmac	
Crew		Weather conditions	Dry	

General informations

DIMENSIONS	Rims		6,5 x 16					**Target (*)**
	Tyres	BF Googrich	195/50-16	Setup pressure		bars	2	**Front** : 2,4 bars
								Rear : 2,2 bars
	(*) : The target means a tyre pressure just at the end of a 15kms long special stage.							
	Weight balance per wheel (with 20L)	kg	Front L		Front R	*Ballast detail*	Weight on front	%
		kg	Rear L		Rear R		Delta L/R	Kg
	Crew weight	kg	Driver		Navigator		Diago delta.	Kg
	Total weight	kg		1180 min	Balast	Kg		
	Total weight without crew	kg		1030 min				

Front axle specification

SUSPENSION	Main spring	daN/mm	6					
	Intermediate spring	daN/mm	0,4					
	Shock absorber	spec	ABO-RA-070097	Pressure	bars	12	Clics base (c / C / D)	-11 / -15 / -9
	Shock setting		Hydraulic bump stop		-15		Clics	
	Anti roll bar	mm	ø 21 full					
	Anti roll bar link length	mm	Left	285 mm (the second has to be adjusted)				Right
	Wheel spacer	mm	Left	No				Right
GEOMETRY	Ride height (A)	mm	Left	230mm, subframe bolt				Right
	Distance between spring cup	mm	Left	1 rev => 1,5 mm ride height				Right
	Toe "in"	mm	Left	0 mm total, toe in on brakes				Right
	Camber with	°'/"	Left	2°50'				Right
	Steering joint ball length	mm	Left	1 rev => 4,8 mm at the wheel				Right
	Caster	°'/"	Left					Right

Rear axle specifications

SUSPENSION	Main Spring	daN/mm	4,5					
	Intermediate spring	daN/mm	0,5	S1600 spec				
	Schock absorber	spec	ABO-RA-070079	Pressure	bars	12	Clics base (c / C / D)	-15 / -15 / -12
	Shock setting		Hydraulic bump stop		-1,5 revs		Clics	
	Rear axle crossmember	mm	5/26 full					
	Wheel spacer	mm	Left	No				Right
GEOMETRY	Ride height (B)	mm	Left	350mm on rear body cross member				Right
	Spring cup measurement (D)	mm	Left	1 rev => 2 mm ride height				Right
	Wheel base with crew	mm	Left					Right
	Toe in	mm	Left	5 mm "in" Total				Right
	Toe in shim	°'/"	Left	"-" means less toe in				Right
	Camber with	°'/"	Left	1°50'				Right
	Camber shim	°'/"	Left	"-" means less camber				Right

Braking specifications

BRAKES	Caliper (Piston Ø / nb)	mm	Left	44 / 40	4 pistons	31,8	2 pistons	Rear
	Diameter / Thickness (bd new)	mm	Left	302 / 26		280 / 8		Rear
	Pads (Mark / model)	spec	Left	Pagid / RS 15		FERODO DS3000		Rear
	Master cylinder (Ø)	inch	Principal	22 mm	Without servo		0.700"	HB
	Rear brake pressure limitor	spec		Bendix	Cutting	bars		

Steering specifications

STE	Steering rack	spec		BCSP4000ZN, CITROEN Racing shop			
	Steering rack height setting	mm	Left				Rear
	Power steering pump	spec		BCSP4007ZX CITROEN Racing shop		Ø Caliber	Following driver

Gearbox specifications

GEAR	Gears	12 x 36	16 x 34	17 x 28	20 x 27	21 x 24		
	Final ratio (speed in accordance)	13x54 (long, 195km/h)		12x53 (medium, 183km/h)		12x57 (short, 171km/h)		
	Differential	Accel	30	Deccel	90	Preload	9 m.daN	quadridisque

Front spring cup measurement

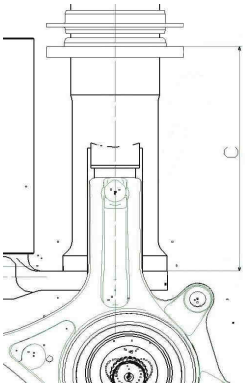

Rear spring cup measurement

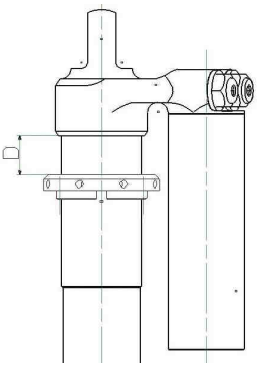

Front ride height measurement

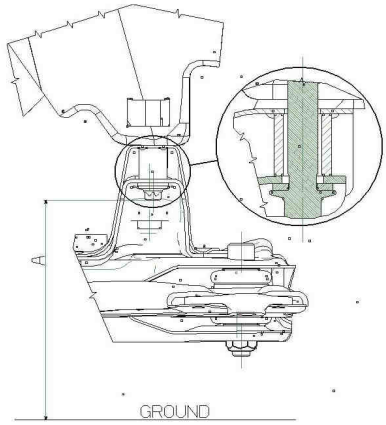

Rear ride height measurement

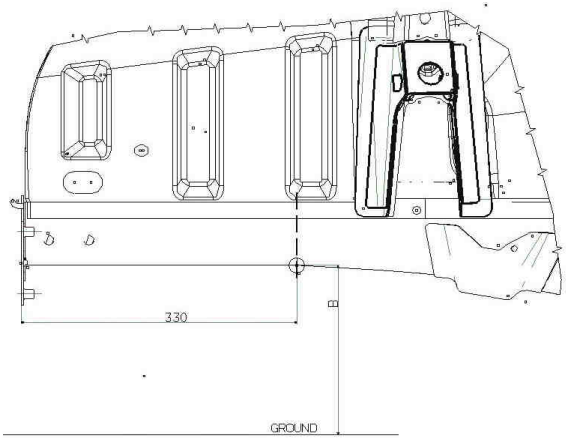

C2R2MAX

CITROËN RACING

Weight balance setup sheet

Configuration conditions :

20 liters of fuel in the tank.
1 only spare wheel
4 wheels equipped with brand new racing tyres P = 2 bars.
Inboard tool set installed (tools, jack, makita, spare parts)
Front anti-roll bar disconected
Driver (helmet, shoes,...) installed.
Co-driver (helmet, shoes,...) installed.

R2 Homologation weight :

1030 kg without crew
1180 kg with the crew

Ballast :

Sump guard :
Inside :

FRONT AXLE WEIGHT TARGET : LESS THAN 1 KG
Example : **Left front wheel 364 kg / Right front wheel 363,5 kg**

Front Left	
Mass	Kg
Ride Height	
Target (A)	mm
Measure (A)	mm
Spring cup measurement	
Measure (C)	mm

Front Right	
Mass	Kg
Ride Height	
Target (A)	mm
Measure (A)	mm
Spring cup measurement	
Measure (C)	mm

Rear Left	
Mass	Kg
Ride Height	
Target (B)	mm
Measure (B)	mm
Spring cup measurement	
Measure (D)	mm

Rear Right	
Mass	Kg
Ride Height	
Target (B)	mm
Measure (B)	mm
Spring cup measurement	
Measure (D)	mm

REAR AXLE WEIGHT TARGET : LESS THAN 5 KG
Example : **Rear left wheel 228 kg / Rear right wheel 224 kg**
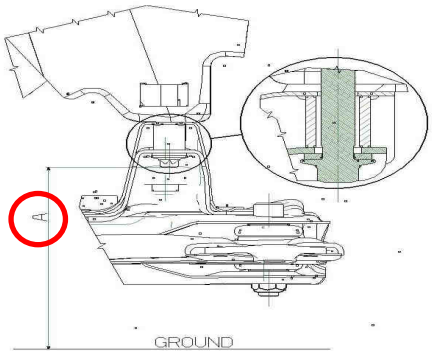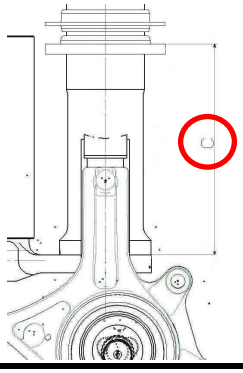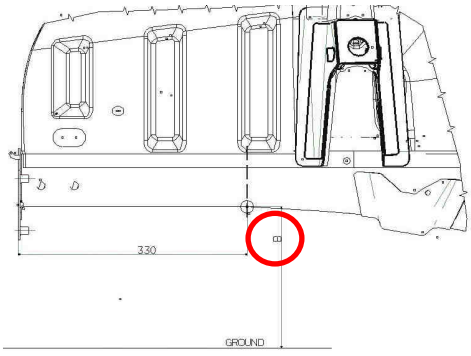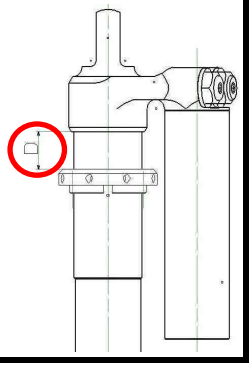
Front ride height measurement	Front spring cup measurement	Rear ride height measurement	Rear spring cup measurement